Dorr-Oliver Eimco® Pumps

DISINTEGRATOR

CENTRIFUGAL

Efficient transportation of liquid/solid slurries


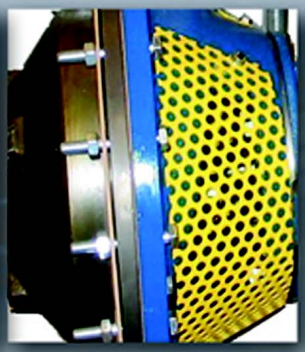
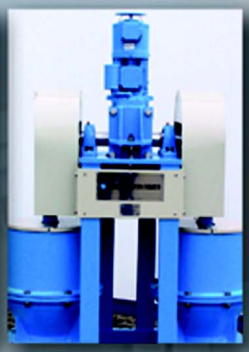


IMPURITY ELIMINATOR

DIAPHRAGM

DORR-OLIVER EIMCO

A GL&V COMPANY

Pumps have been our business for over 90 years...

Our Company

Dorr-Oliver Eimco (DOE) is a leading supplier of high performance liquid/solid separation equipment and process systems. One of these leading technologies is our pump product line which helps our customers transport liquid/solid slurries to their desired destination. Dorr-Oliver Eimco traces its history in pump manufacturing to 1915, when Edward L. Oliver developed a line of centrifugal pumps to support the filter business. Some of the original Dorrco™ pumps are still in operation today! DOE continues to specialize in pumps that are rugged and durable, handling heavy slurries, extremely corrosive or abrasive materials, and can solve your specific pumping challenges in a unique way. Our dedicated pump production team manufactures DOE pumps to precise specifications and tolerances to meet your stringent requirements.

Applications

Dorr-Oliver Eimco pumps are widely implemented in a variety of industries including:

- Water and wastewater treatment–sludge transfer handling, chemical feed, and transport of aqueous solutions containing a high percentage of impurities.
- Pulp and paper–The DOE Gorator® unit is used to defiberize broke, reduce knot rejects to fiber, and break up black liquor clumps.
- Mineral processing–thickener underflow and transport of most basic metals and mineral slurries.
- Chemical processing–transport of acids, alkalies, chlorine compounds, and a variety of other difficult to handle, severely corrosive, and abrasive materials.
- Food processing–movement of a variety of food products from coffee grounds to corn fiber.
- General industries–Dorr-Oliver Eimco pumps transport a variety of products and slurries which include plating solutions, foundry sands, pickle liquors, scrubber system sludges, dipping compounds and flocculants among numerous other applications.

Choose the Best Pump for Your Particular Application

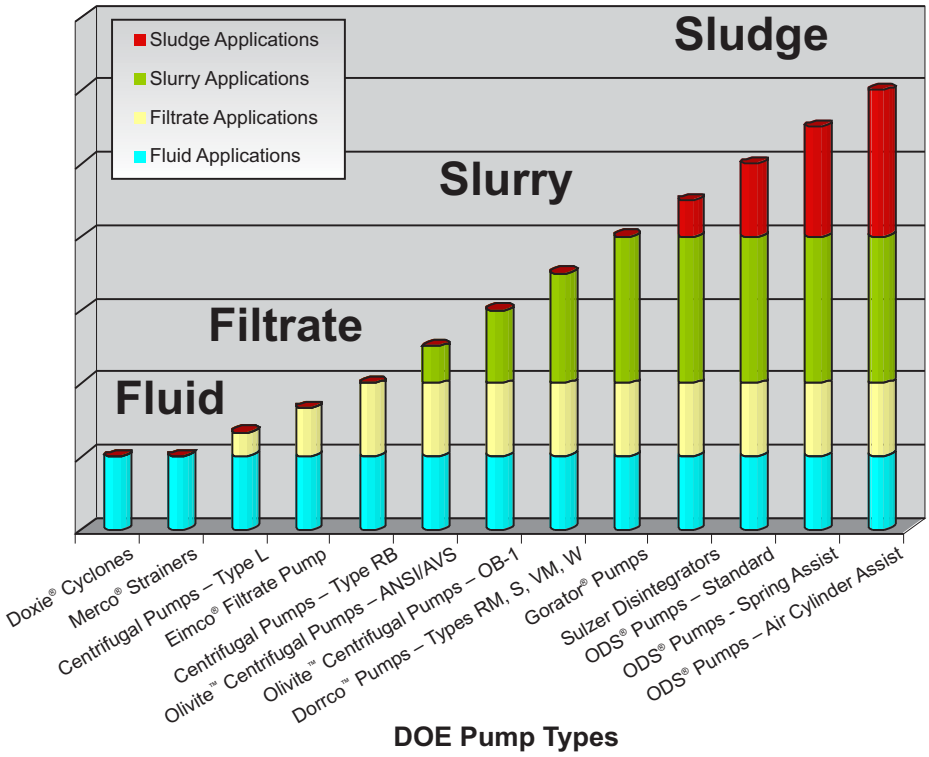

The ODS® Air-Operated Diaphragm Pump

Pulse Transfer Thickening: the ODS® Pump

This air-operated diaphragm pump is superior to centrifugal and helical screw pumps for heavy-duty applications and better than mechanically or hydraulically operated pumps due to its simplicity of control and evenly distributed power transmission.

Principal Benefits

Designed and built for long-term, year-in-year out, heavy-duty performance, the ODS Pump delivers more process efficiency requiring minimal maintenance. It lasts longer and pumps slurries no other pump can handle.

- The ODS Pump can be automated to match capacity to process requirements for maximum process efficiency
- It's unique construction allows the pump to be operated dry, indefinitely. It cannot air bind, has no stator to burn out
- There are no seals, so contamination of process slurry or the environment from seal leaks is not possible.
- Pump capacity and discharge pressure can be adjusted during operation for maximum flexibility
- Rhythmic plunger-type action minimizes particle degradation of even the most delicate materials

Applications

The ODS pump can handle tough corrosives, abrasives and highly concentrated or unusually viscous slurries, extremely volatile slurries and delicate and unstable slurries. Temperature range is up to 200°F and solids content of slurries can be up to 75%. Flow ranges from 0.5 gpm to 180 gpm.

User experience shows the ODS Pump can be used in a variety of applications including chemical processing, wastewater treatment general manufacturing, minerals processing and food processing. Combined with ODS Pump automatic controls, operators can automatically or remotely adjust air, stroke rate, and pump sequencing, and monitor moisture amounts.

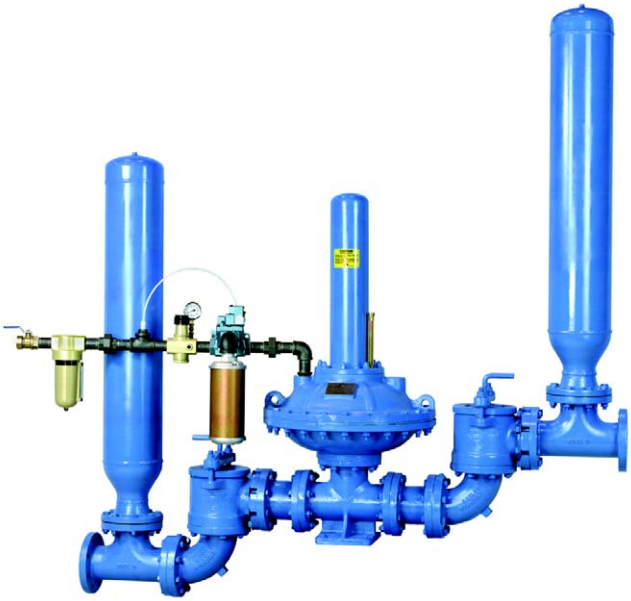

Choose from several check valves and components to suit your particular application. The ODS Pump is available in three basic models and five sizes.

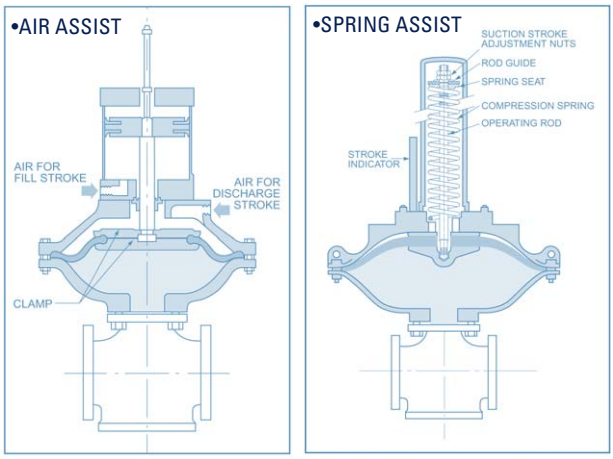

When equipped with the patented spring assist, the pump is self-priming and has suction lift up to 10 feet. Capacity increases by 50% due to faster filling action, and easily handles slurries with high solids concentration and viscosity.

The Gorator® Pump

Disintegrate, Macerate, Shred and Pump

The Gorator® Pump sizes, reduces, disperses, separates, delumps, grinds, chops, macerates and even pumps. Working on a simple inclined rotor principle, the Gorator pump is self-cleaning, non-clog, and operates trouble-free under the most difficult conditions.

An impeller, taking the form of a flat plate, is mounted at an oblique angle on the end of the pump shaft. Rotation of the impeller produces a centrifugal action which pumps the material and discharges it radially through the outlet. Notched teeth are located in peripheral stator bars to chop the material during passage through the pump.

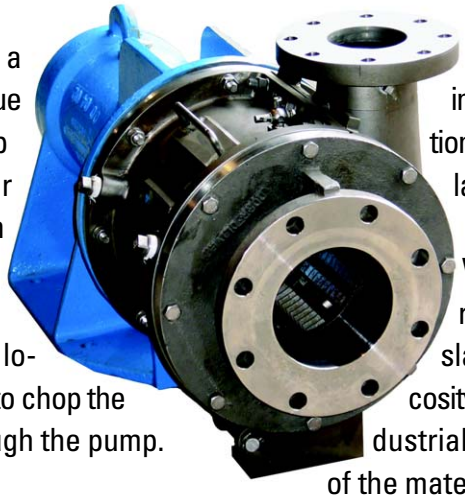

Principal Benefits

The Gorator pump accomplishes three distinct functions in one unit, saving on equipment costs. Higher shear performance gives more intense dispersion than with conventional machines. The casing is made to open quickly so that it is easy to inspect, clean and to remove tramp materials. The Gorator Pump is constructed for heavy-duty applications providing for a long service life.

Applications

The Gorator Pump can be adapted to meet a wide variety of needs in an ever-increasing number of industries. It is easily fitted to meet individual reducing needs by spacing the liner bars to exactly the position required for various size particulates.

Wood chips, synthetic fibers, rags, rugs, plastics, raw sludges, slurries, slaughter-house residue, high-viscosity materials, chemical residue, industrial waste and debris are but a few of the materials being successfully handled by the Gorator.

Applications serving the wastewater industry for more than thirty years has proven this rugged machine. Material is reduced to a slurry so that material handling of solids, and process equipment clogging, is eliminated.

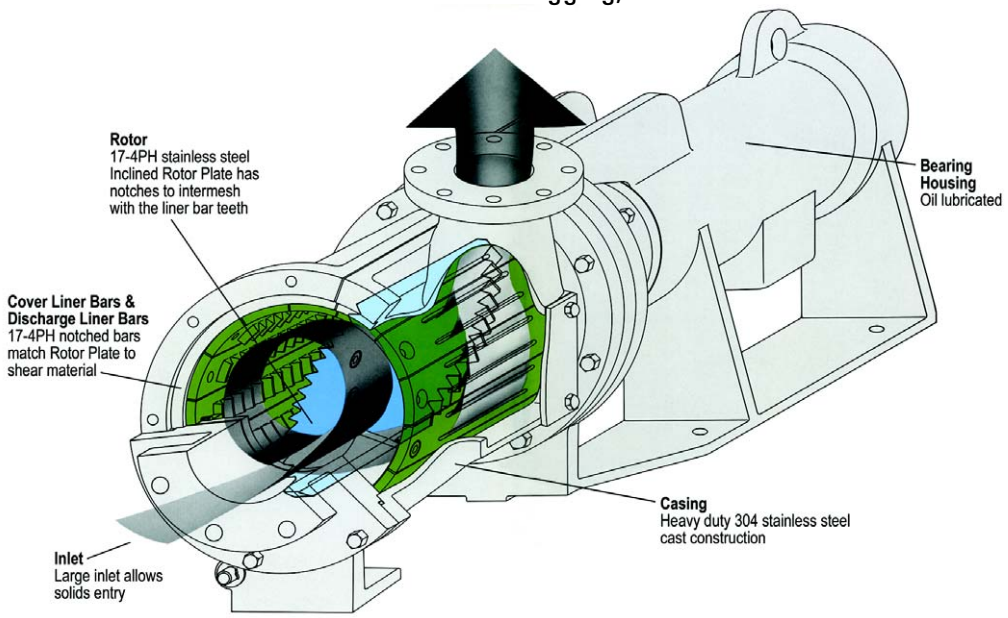

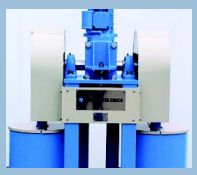

Positive Displacement Pumps

Dorrco™ positive displacement double diaphragm pumps are constructed of extra heavy-duty materials for tough, long-lasting service in extreme environments. These pumps can be installed at liquid level in thickener applications to prevent flooding or start-up problems. The pump operates with a smooth action, which prevents agitation and keeps the slurry from degrading during transport. Dorrco pumps come in two series: Type W and VM.

Principal Benefits

The Dorrco pump enjoys many advantages over centrifugal pumps used in heavy-duty service. Because drive motion is at right angles to the diaphragm, you can expect the diaphragm to have a greater life. Anti-friction ball bearings also provide for a smooth pumping action which reduces friction and wear on moving parts. The Dorrco pump utilizes standard horizontal electric motors for lower power consumption. A stroke adjustment handwheel allows for easy adjustment of stroke length to vary discharge rate while the pump is operating. All components of the pump are above ground and easily accessed for maintenance.

Applications

Dorrco Pumps have been used successfully in metallurgical processes for over sixty years. The pump can be used with thickener and clarifier underflow, pulp mill liquors, slurries with heavy solids content, abrasive and corrosive alkaline or acid slurries. Flow ranges from 9 gpm (2 M^3/H) to 600 gpm (136 M^3/H) with multiple models are available for application selection. Protective rubber lining is also available for acidic/alkaline conditions.

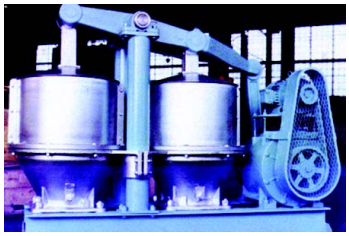

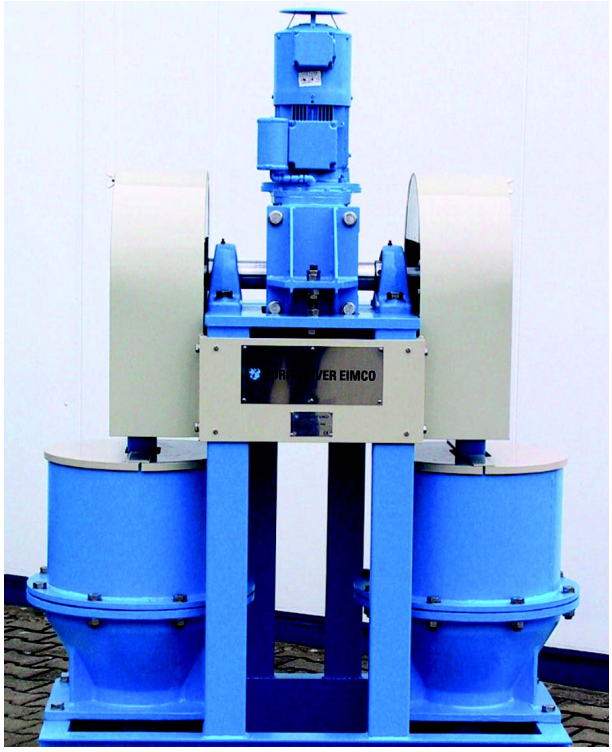

Exacting standards are kept while manufacturing Dorrco pumps (pump manufactured in Germany).

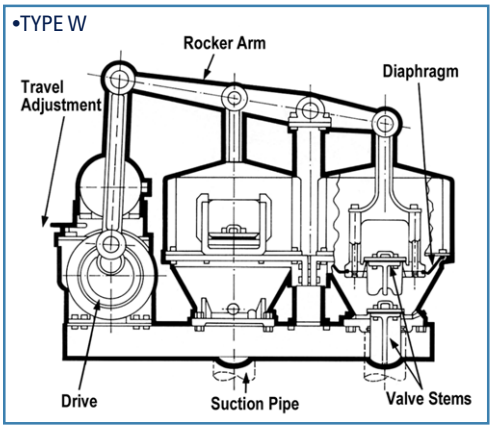

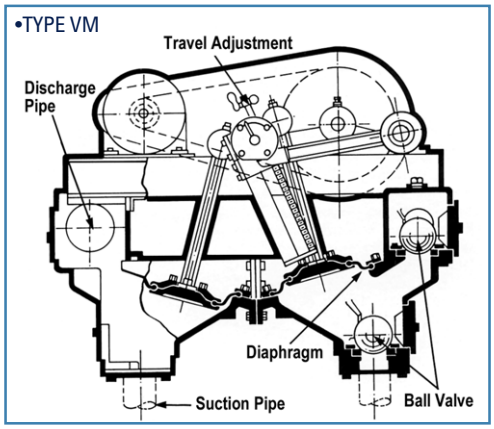

Type W Dorrco Pump handles flow volumes from 40 to 600 gpm (9-136 M^3/H).
Type VM Dorrco Pump for flowvolumes of between 9 and 90 gpm (2-20 M^3/H).

Centrifugal Pump

Handle Corrosive and Abrasive Solids

Olivite™ centrifugal pumps are constructed of heavy metal, and are lined with 1/4-inch highly corrosion and abrasion-resistant liner materials (Kynar® impeller or Hypalon® liner). Olivite pumps are available in direct drive or V-belt design. With the ability to handle corrosive and abrasive solids, Olivite pumps are the superior solution for handling acids, alkalies and slurries.

Olivite™ OB-1 Pumps – Principal Benefits

The Olivite OB-1 pump can be operated under severe high temperature and high pressure conditions due to its proven design of lightweight Kynar impeller reinforced with fine glass or carbon. Can reach maximum temperatures of 250°F using Kynar lining or 215°F with Hypalon liner, unless restricted by the compound being pumped. The heavy-duty construction ensures that shape is retained, while its low weight and highly efficient vane geometry reduces shaft deflection, resulting in longer bearing life and improved pump performance.

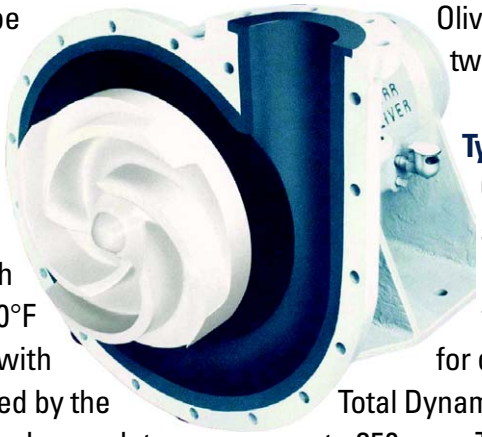

Olivite™ OB-1 Pumps – Applications

The pump is commonly used with acid, alkalies, and chlorine compounds at maximum pressure of 180 psi. Olivite OB-1 Pumps are available in three sizes.

Olivite™ ANSI Pumps – Principal Benefits

These pumps are designed to ANSI specifications with back pull out, and include solid Kynar impellers for pumping applications involving nearly all corrosive solutions, hot as well as cold. Our ANSI Pump is constructed with vulcanized lining material (Kynar or Hypalon) mechanically locked into the ductile iron metal casing so it won't shake loose and enables longer service life. The impeller design is optimized for greater efficiency and very low Net Positive Suction Head (NPSH) and can be adjusted externally, requiring no seal readjustment or special tools, thus simplifying operation.

Olivite™ ANSI Pumps – Applications

Built to strict ANSI standards and offering components that are more flexible and reliable than most competitive pumps, the Olivite ANSI Pump can be used in a wide variety of chemical applications. Olivite ANSI Pumps are available in two sizes.

Type L Pumps – Principal Benefits

Constructed of cast iron or 316 stainless steel, Type L pumps are long lasting and essentially maintenance free. They are designed for discharge heads up to 120 feet Total Dynamic Head (TDH) and handle flows up to 350 gpm. The impellers and casings have been designed for maximum NPSH advantage, as well as trouble-free operation and long life.

Type L Pumps – Applications

Primarily used for pumping filtrates, the Type L pump's stainless steel construction is especially suited to food and chemical processing applications. Parts are interchangeable on 1-1/2" and 2" models minimizing parts stocking. Mechanical seals or packed boxes are available for greater flexibility. Choose from direct connected or optional V-belt drive assemblies.

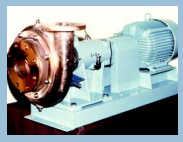

Filtrate Pump/Liquid-Solid Separation

Type RB Pumps

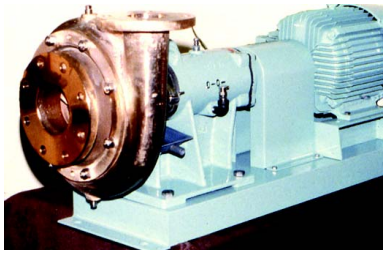

The RB pump is designed for straight filtrate to transfer liquids and light slurries. Its all-metal design delivers as much as 20 years of service in constant use.

Principal Benefits

The specially designed four-vane (open or shrouded) impeller delivers highly efficient operation in liquid handling applications, while the two-vane impeller gently transfers mud type materials with low shear. The pump is designed with a high load rating bearing frame, thick walls and rugged volute meaning longer life, cooler operation, and proper alignment in spite of pumping strain. The stuffing box accepts either packing or mechanical seals for flexibility in service. Cast iron, bronze or stainless steel wet-end construction also means flexibility in application and resistance to wear and corrosion. Direct drive or V-belt designs are available.

Applications

The Type RB Pump can be used in filtrate transfer, cane mud, and light slurry pumping.

Eimco® Filtrate Pump

This centrifugal pump is flanged directly to the receiver. The conical impeller is constructed with open, snail-type plates. This pump type is specially designed for operating in receivers under vacuum conditions. Our customers use the Eimco filtrate pump in a broad range of applications not only for filtrates in vacuum filter stations but also for discharging white water of paper machines, for gas treatment plants and many other purposes.

Applications

The pump is commonly used in conjunction with Dorr-Oliver Eimco Horizontal Belt Filters.

Doxie® Impurity Eliminator Hydrocyclones– Enhancers to Protect your Pumps

Protect mechanical seals or bearings from abrasive dirt and put an end to the constant maintenance problems and expenses caused by damaged mechanical seals or canned pump bearings. Doxie Impurity Eliminators are cyclone separators that remove solids as small as a few microns in diameter so that only clean fluids reach the rubbing surfaces of expensive equipment. The abrasive particles are literally spun from the flow by centrifugal force.

Principal Benefits

Our hydrocyclones contain no moving parts, which means there is nothing to adjust, and no maintenance problems. Each of these hydrocyclones offers a relatively low cost answer to removing impurities from feed streams. As long as there is enough pressure differential to operate a cyclone (more than 20 psi), installation is simple. Three different models are available to meet your specific needs, pressures and operating temperatures.

Doxie 5

Six 10 mm cyclones manifolded in a common pressurized housing (patented). Adjustable capacity and self-contained strainer. Available in 316 SS. Maximum working pressure 2,000 psi @ 400°F and 1,000 psi at 800°F temperature.

Doxie Type A

Single 10 mm cyclone machined from a single block of 316 SS. Also available in other alloys. Exclusive Dorr-Oliver Eimco design. Maximum working pressure 2,000 psi @ temperatures below 400°F.

Doxie Type P

Single 25 mm cyclone made of nylon or corrosion-resistant Kynar construction. Low-cost, rugged separator. Maximum working pressure 200 psi @ 200°F and 600 psi at ambient temperature.

We're here to serve you…

At Dorr-Oliver Eimco we're particular about parts service

Dorr-Oliver Eimco pumps are sold by a global network of municipal and industrial representatives in the U.S., Canada, Germany, and Italy. DOE pump representatives can provide local service and assistance in specifying, installing and maintaining your pump products for maximum process productivity. We can respond to your inquiries and emergency situations quickly and efficiently. In our production facility we maintain a stocking inventory of parts and assembly kits to assist your every need. And with our automated parts order entry and tracking system, we can get the right product to you – anywhere in the world.

And we're more particular about customer service

When you deal with Dorr-Oliver Eimco and our representatives you can be assured that you'll get up front assistance with all your specifications and sizing needs. Our pump teams have the expertise and the experience to help solve your industry specific pumping objectives. Wherever there's a problem, we're prepared to answer your call. Our local representative network will assist you at all the stages of your project from planning to start up and beyond.

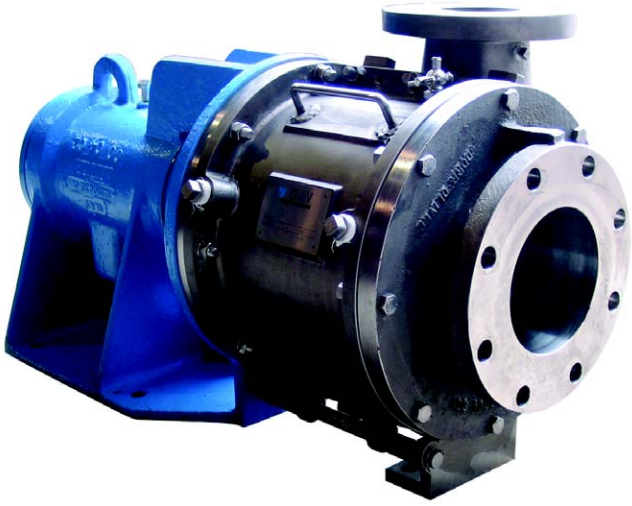

Dorr-Oliver Eimco is here to help you with all your solid/liquid separation needs. Just call us or your nearest Dorr-Oliver Eimco representative.

U.S. 1.610.740.1015 • Canada 1.705.325.6181
Italy +39.02.516821 • Germany +49 (0) 6123 / 975 300

DORR-OLIVER EIMCO

find it all @ www.glv.com